TN805, TN815, TS820
TYN608, TYN808, TYN1008

Sensitive and standard 8 A SCRs

Features

- On-state rms current, $I_{T(RMS)}$ 8 A
- Repetitive peak off-state voltage, V_{DRM}/V_{RRM} 600 to 1000 V
- Triggering gate current, I_{GT} 0.2 to 15 mA

Description

Available either in sensitive (TS8) or standard (TN8 / TYN) gate triggering levels, the 8 A SCR series is suitable to fit all modes of control found in applications such as overvoltage crowbar protection, motor control circuits in power tools and kitchen aids, inrush current limiting circuits, capacitive discharge ignition and voltage regulation circuits.

Available in through-hole or surface-mount packages, they provide an optimized performance in a limited space.

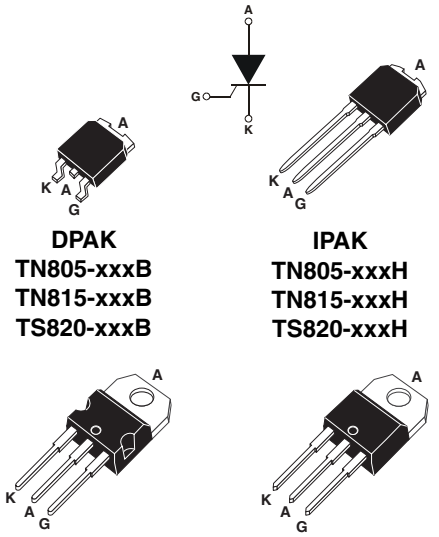

DPAK
TN805-xxxB
TN815-xxxB
TS820-xxxB

IPAK
TN805-xxxH
TN815-xxxH
TS820-xxxH

TO-220AB
(TS820-xxxT)

TO-220AB
(TYNx08RG)

Table 1. Device summary

Order code	Voltage (xxx) V_{DRM}/V_{RRM}				Sensitivity I_{GT}	Package
	600 V	700 V	800 V	1000 V		
TN805-xxxB	X		X		5 mA	DPAK
TN805-xxxH	X		X		5 mA	IPAK
TN815-xxxB	X		X		15 mA	DPAK
TN815-xxxH	X		X		15 mA	IPAK
TS820-xxxB	X	X			0.2 mA	DPAK
TS820-xxxH	X	X			0.2 mA	IPAK
TS820-xxxT	X	X			0.2 mA	TO-220AB
TYNx08RG	X		X	X	15 mA	TO-220AB

1 Characteristics

Table 2. Absolute ratings (limiting values)

Symbol	Parameter			Value		Unit
				TN805 TN815 TS820	TYNx08	
$I_{T(RMS)}$	On-state rms current (180° conduction angle)		T_c = 110 °C	8		A
$I_{T(AV)}$	Average on-state current (180° conduction angle)		T_c = 110 °C	5		A
I_{TSM}	Non repetitive surge peak on-state current	t_p = 8.3 ms	T_j = 25 °C	73	100	A
		t_p = 10 ms		70	95	
I^2t	I^2t value for fusing	t_p = 10 ms	T_j = 25 °C	24.5	45	A^2S
dI/dt	Critical rate of rise of on-state current $I_G = 2 \times I_{GT}$, $t_r \leq 100$ ns	F = 60 Hz	T_j = 125 °C	50		A/µs
I_{GM}	Peak gate current	t_p = 20 µs	T_j = 125 °C	4		A
$P_{G(AV)}$	Average gate power dissipation		T_j = 125 °C	1		W
T_{stg} T_j	Storage junction temperature range Operating junction temperature range			- 40 to + 150 - 40 to + 125		°C
V_{RGM}	Maximum peak reverse gate voltage (for **TN8xx** and **TYNx08** only)			5		V

Table 3. Sensitive electrical characteristics (T_j = 25 °C, unless otherwise specified)

Symbol	Test conditions			TS820	Unit
I_{GT}	V_D = 12 V, R_L = 140 Ω		MAX.	200	µA
V_{GT}			MAX.	0.8	V
V_{GD}	$V_D = V_{DRM}$, R_L = 3.3 kΩ, R_{GK} = 220 Ω	T_j = 125 °C	MIN.	0.1	V
V_{RG}	I_{RG} = 10 µA		MIN.	8	V
I_H	I_T = 50 mA, R_{GK} = 1 kΩ		MAX.	5	mA
I_L	I_G = 1 mA ,, R_{GK} = 1 kΩ		MAX.	6	mA
dV/dt	V_D = 65% V_{DRM}, R_{GK} = 220 Ω	T_j = 125 °C	MIN.	5	V/µs
V_{TM}	I_{TM} = 16 A, t_p = 380 µs	T_j = 25 °C	MAX.	1.6	V
V_{t0}	Threshold voltage	T_j = 125 °C	MAX.	0.85	V
R_d	Dynamic resistance	T_j = 125 °C	MAX.	46	mΩ
I_{DRM} I_{RRM}	$V_{DRM} = V_{RRM}$, R_{GK} = 220 Ω	T_j = 25 °C	MAX.	5	µA
		T_j = 125 °C		1	mA

Table 4. Standard electrical characteristics (T_j = 25 °C, unless otherwise specified)

Symbol	Test conditions			TN805	TN815	TYNx08	Unit
I_{GT}	V_D = 12 V, R_L = 33 Ω		MIN.	0.5	2	2	mA
			MAX.	5	15	15	
V_{GT}			MAX.	1.3			V
V_{GD}	$V_D = V_{DRM}$, R_L = 3.3 kΩ	T_j = 125 °C	MIN.	0.2			V
I_H	I_T = 100 mA , gate open		MAX.	25	40	30	mA
I_L	$I_G = 1.2\ I_{GT}$		MAX.	30	50	70	mA
dV/dt	V_D = 67% V_{DRM}, gate open	T_j =125 °C	MIN.	50	150	150	V/µs
V_{TM}	I_{TM} = 16 A t_p = 380 µs	T_j = 25 °C	MAX.	1.6			V
V_{t0}	Threshold voltage	T_j = 125 °C	MAX.	0.85			V
R_d	Dynamic resistance	T_j = 125 °C	MAX.	46			mΩ
I_{DRM} I_{RRM}	$V_{DRM} = V_{RRM}$	T_j = 25 °C	MAX.	5			µA
		T_j = 125 °C		2			mA

Table 5. Thermal resistance

Symbol	Parameter			Value	Unit
$R_{th(j-c)}$	Junction to case (DC)			1.3	°C/W
$R_{th(j-a)}$	Junction to ambient (DC)	$S^{(1)}$ = 0.5 cm^2	DPAK	70	°C/W
			IPAK	100	
			TO-220AB	60	

1. S = Copper surface under tab

Figure 1. Maximum average power dissipation versus average on-state current

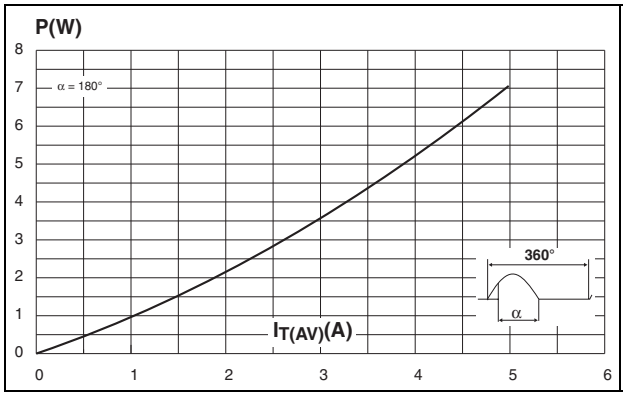

Figure 2. Average and DC on-state current versus case temperature

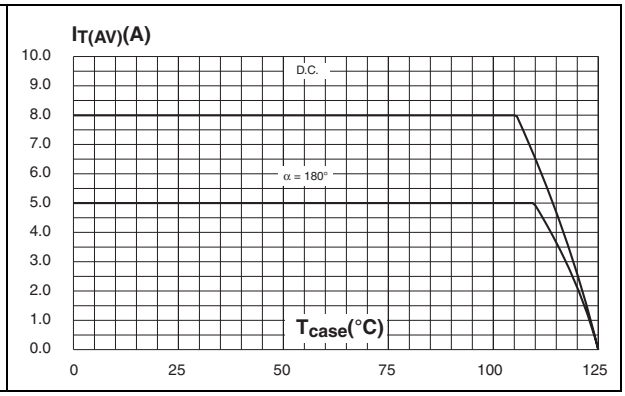

Figure 3. Average and DC on-state current versus ambient temperature (DPAK)

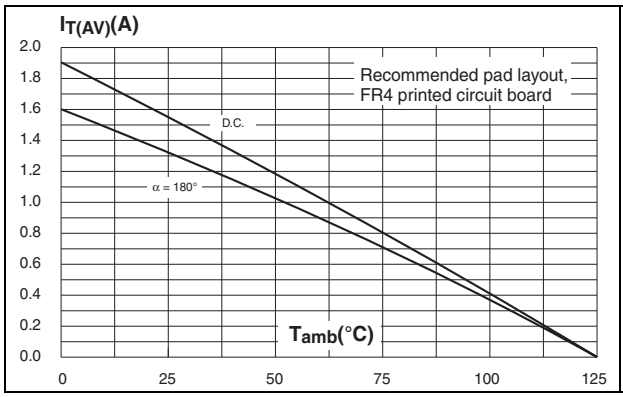

Figure 4. Relative variation of thermal impedance junction to case versus pulse duration

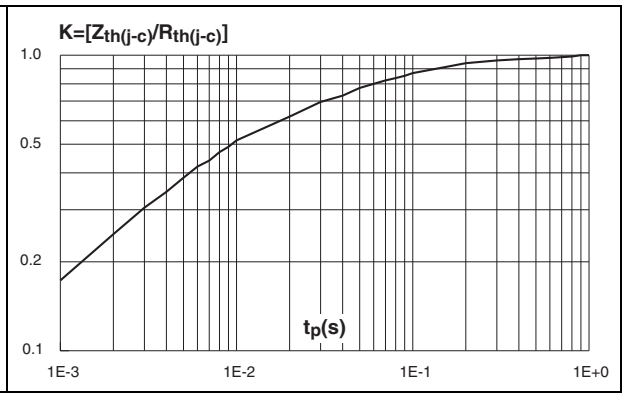

Figure 5. Relative variation of thermal impedance junction to ambient versus pulse duration (DPAK)

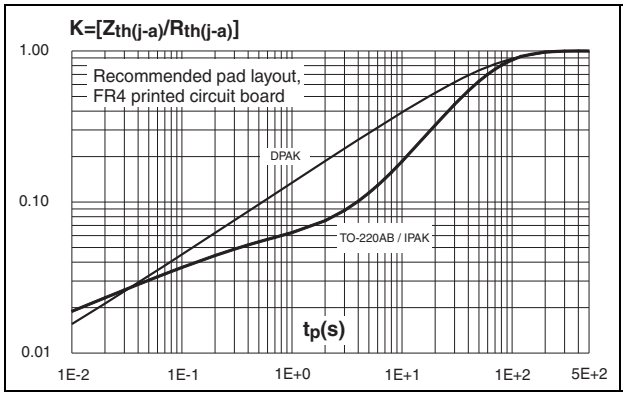

Figure 6. Relative variation of gate trigger current and holding current versus junction temperature for TS820

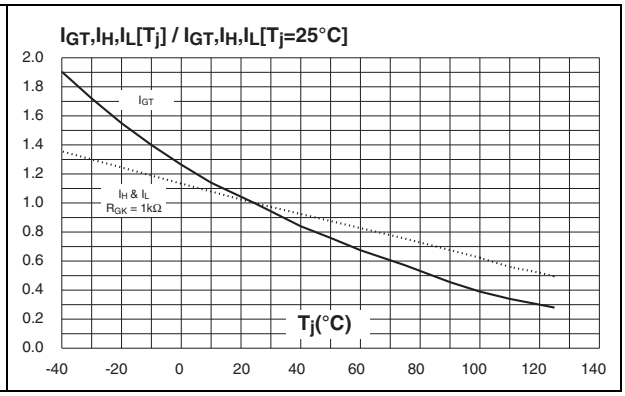

Figure 7. Relative variation of gate trigger and holding current versus junction temperature

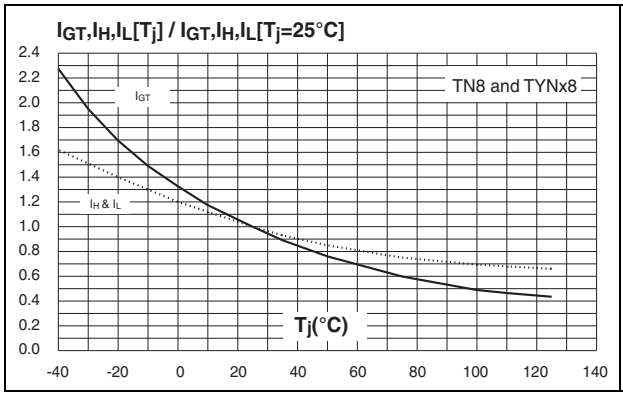

Figure 8. Relative variation of holding current versus gate-cathode resistance (typical values)

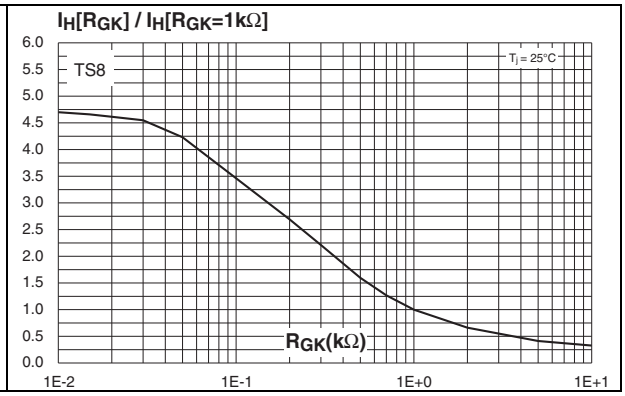

Figure 9. Relative variation of dV/dt immunity versus gate-cathode resistance (typical values) for TS820

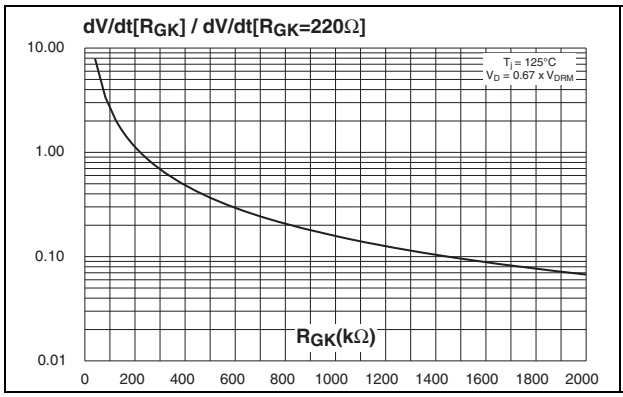

Figure 10. Relative variation of dV/dt immunity versus gate-cathode capacitance (typical values) for TS820

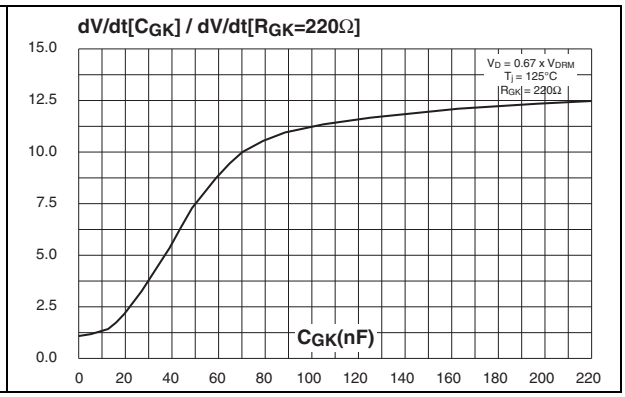

Figure 11. Surge peak on-state current versus number of cycles

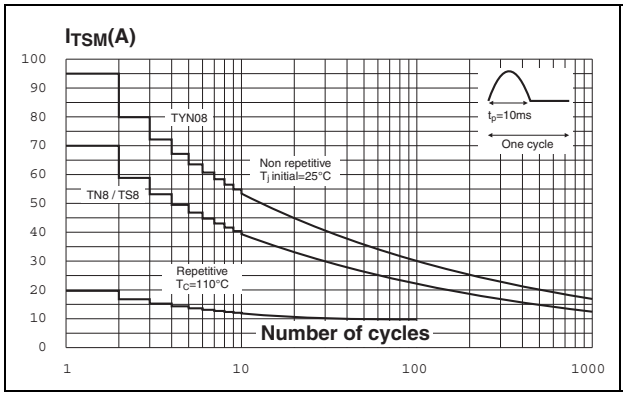

Figure 12. Non-repetitive surge peak on-state current and corresponding values of I^2t

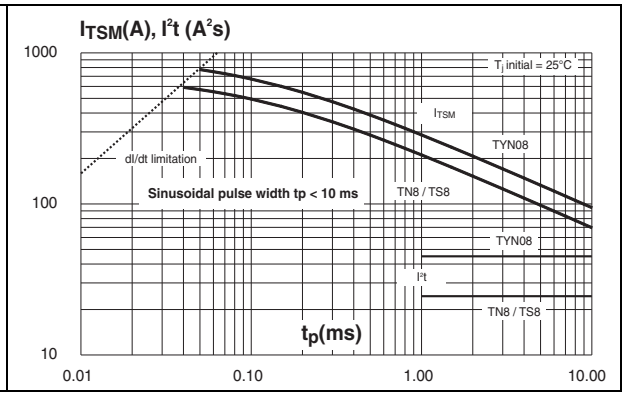

Figure 13. On-state characteristics (maximum values)

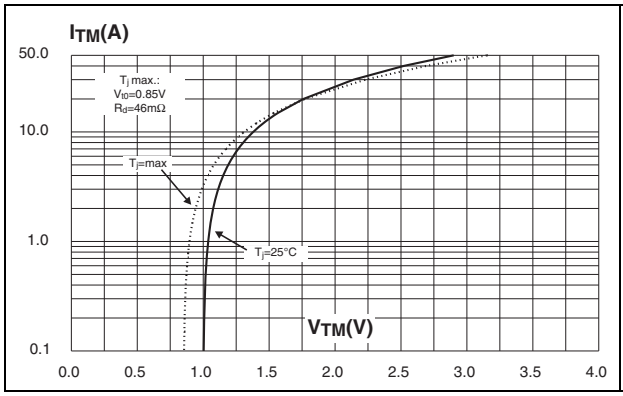

Figure 14. Thermal resistance junction to ambient versus copper surface under tab (DPAK)

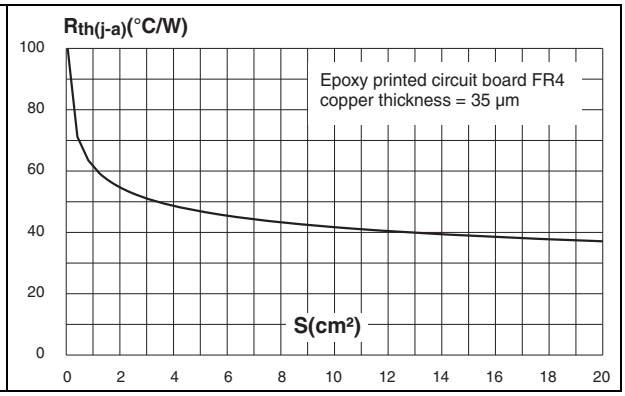

2 Ordering information scheme

Figure 15. TN8 series

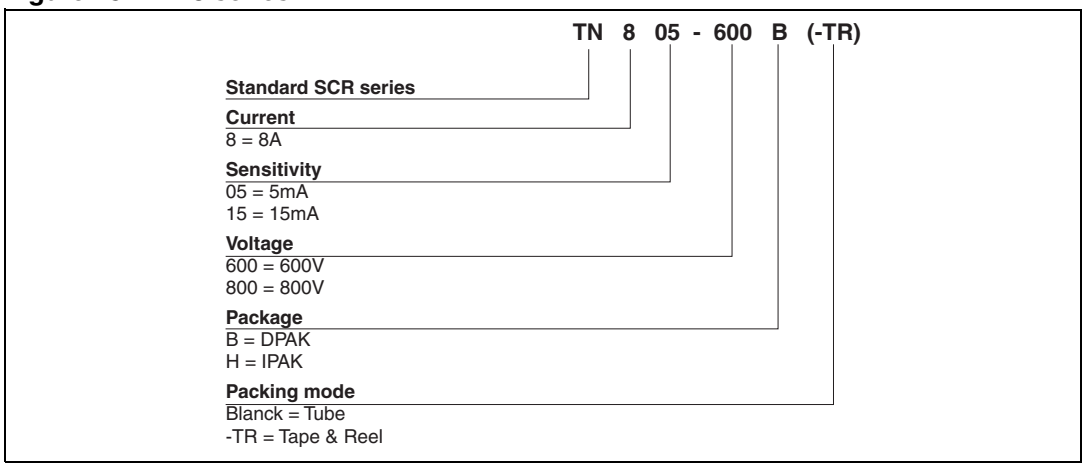

Figure 16. TS8 series

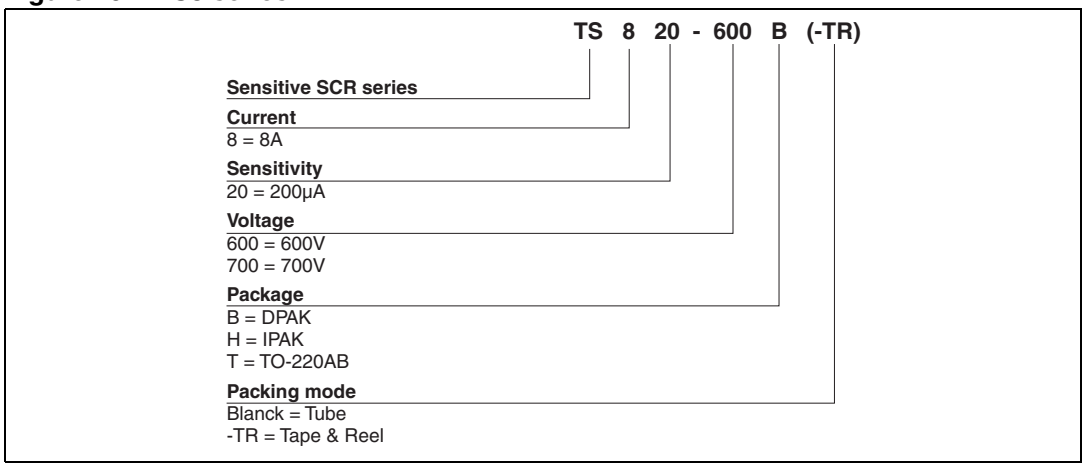

Figure 17. TYNx08 series

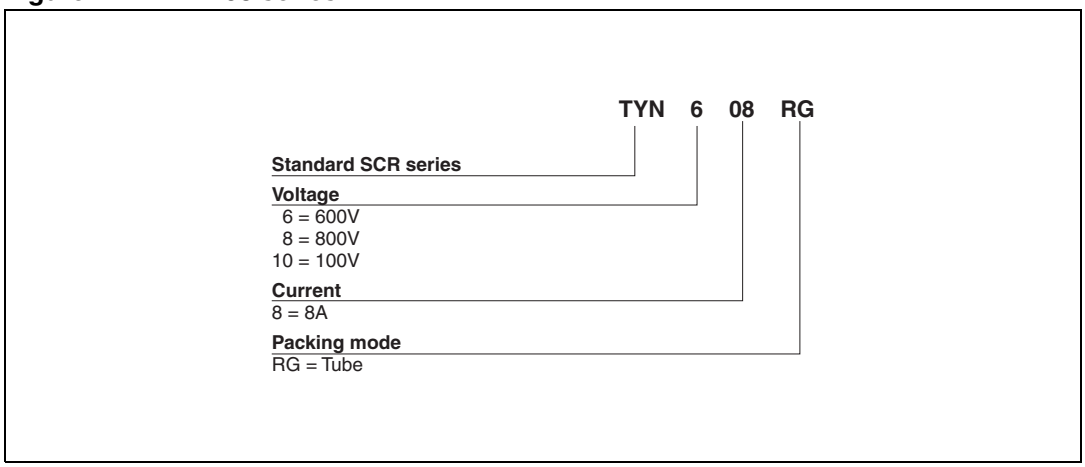

3 Package information

- Epoxy meets UL94, V0
- Lead-free packages

In order to meet environmental requirements, ST offers these devices in different grades of ECOPACK® packages, depending on their level of environmental compliance. ECOPACK® specifications, grade definitions and product status are available at: *www.st.com*. ECOPACK® is an ST trademark.

Table 6. DPAK dimensions

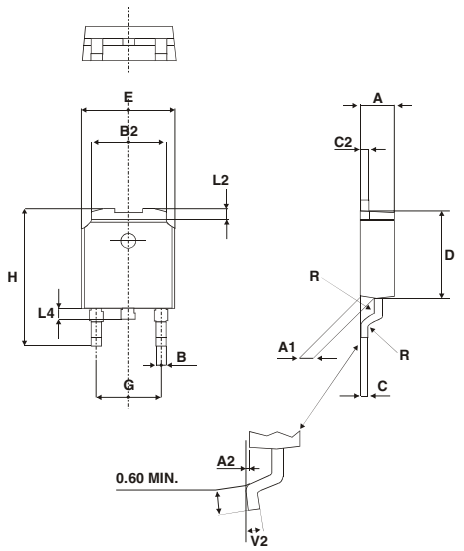

Ref.	Dimensions			
	Millimeters		Inches	
	Min.	Max.	Min.	Max.
A	2.20	2.40	0.086	0.094
A1	0.90	1.10	0.035	0.043
A2	0.03	0.23	0.001	0.009
B	0.64	0.90	0.025	0.035
B2	5.20	5.40	0.204	0.212
C	0.45	0.60	0.017	0.023
C2	0.48	0.60	0.018	0.023
D	6.00	6.20	0.236	0.244
E	6.40	6.60	0.251	0.259
G	4.40	4.60	0.173	0.181
H	9.35	10.10	0.368	0.397
L2	0.80 typ.		0.031 typ.	
L4	0.60	1.00	0.023	0.039
V2	0°	8°	0°	8°

Figure 18. Footprint (dimensions in mm)

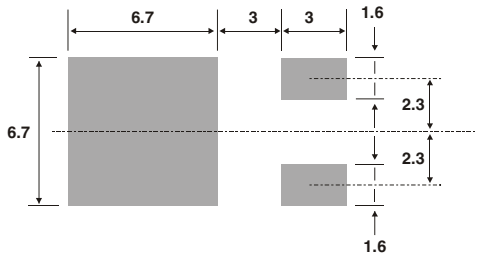

Table 7. IPAK dimensions

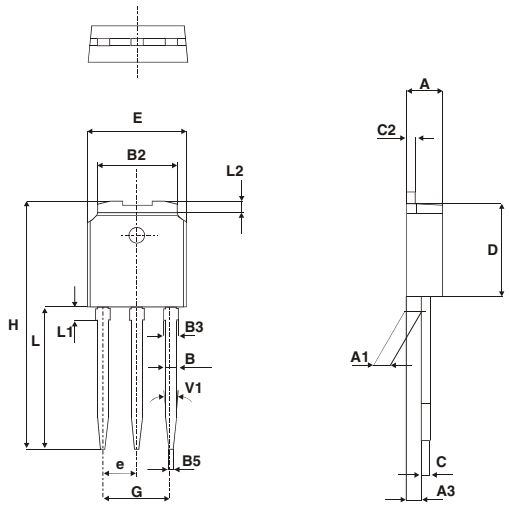

Ref.	Dimensions					
	Millimeters			Inches		
	Min.	Typ.	Max.	Min.	Typ.	Max.
A	2.20		2.40	0.086		0.094
A1	0.90		1.10	0.035		0.043
A3	0.70		1.30	0.027		0.051
B	0.64		0.90	0.025		0.035
B2	5.20		5.40	0.204		0.212
B3			0.95			0.037
B5		0.30			0.035	
C	0.45		0.60	0.017		0.023
C2	0.48		0.60	0.019		0.023
D	6		6.20	0.236		0.244
E	6.40		6.60	0.252		0.260
e		2.28			0.090	
G	4.40		4.60	0.173		0.181
H		16.10			0.634	
L	9		9.40	0.354		0.370
L1	0.8		1.20	0.031		0.047
L2		0.80	1		0.031	0.039
V1		10°			10°	

Table 8. TO-220AB dimensions (for TS820-xxxT)

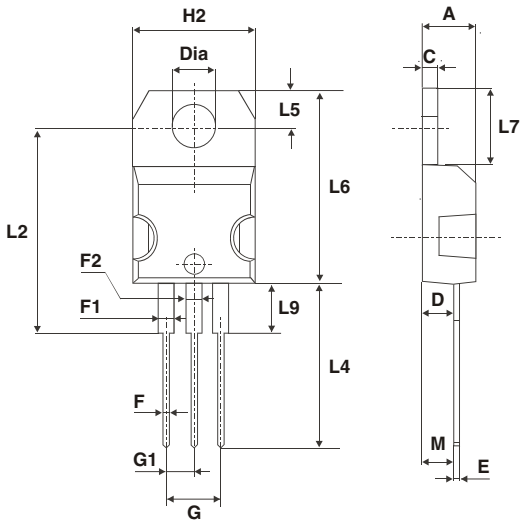

Ref.	Dimensions			
	Millimeters		Inches	
	Min.	Max.	Min.	Max.
A	4.40	4.60	0.173	0.181
C	1.23	1.32	0.048	0.051
D	2.40	2.72	0.094	0.107
E	0.49	0.70	0.019	0.027
F	0.61	0.88	0.024	0.034
F1	1.14	1.70	0.044	0.066
F2	1.14	1.70	0.044	0.066
G	4.95	5.15	0.194	0.202
G1	2.40	2.70	0.094	0.106
H2	10	10.40	0.393	0.409
L2	16.4 typ.		0.645 typ.	
L4	13	14	0.511	0.551
L5	2.65	2.95	0.104	0.116
L6	15.25	15.75	0.600	0.620
L7	6.20	6.60	0.244	0.259
L9	3.50	3.93	0.137	0.154
M	2.6 typ.		0.102 typ.	
Diam.	3.75	3.85	0.147	0.151

Table 9. TO-220AB dimensions (for TYNx8 series)

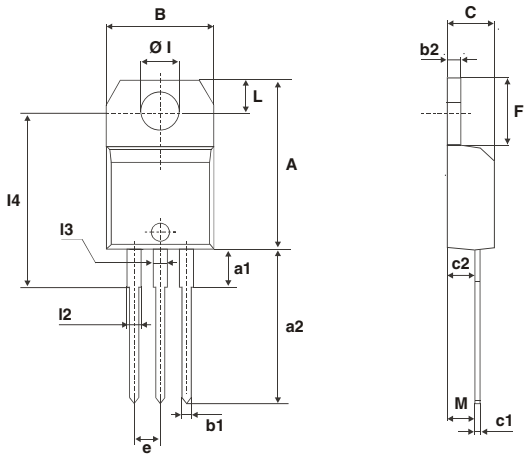

Ref.	Dimensions					
	Millimeters			Inches		
	Min.	Typ.	Max.	Min.	Typ.	Max.
A	15.20		15.90	0.598		0.625
a1		3.75			0.147	
a2	13.00		14.00	0.511		0.551
B	10.00		10.40	0.393		0.409
b1	0.61		0.88	0.024		0.034
b2	1.23		1.32	0.048		0.051
C	4.40		4.60	0.173		0.181
c1	0.49		0.70	0.019		0.027
c2	2.40		2.72	0.094		0.107
e	2.40		2.70	0.094		0.106
F	6.20		6.60	0.244		0.259
ØI	3.75		3.85	0.147		0.151
l4	15.80	16.40	16.80	0.622	0.646	0.661
L	2.65		2.95	0.104		0.116
l2	1.14		1.70	0.044		0.066
l3	1.14		1.70	0.044		0.066
M		2.60			0.102	

4 Ordering information

Table 10. Ordering information

Order code[1]	Marking[1]	Package	Weight	Base qty	Delivery mode
TN805-x00B	TN805x00	DPAK	0.3 g	75	Tube
TN805-x00B-TR	TN805x00	DPAK	0.3 g	2500	Tape and reel
TN805-x00H	TN805x00	IPAK	0.4 g	75	Tube
TN815-x00B	TN815x00	DPAK	0.3 g	75	Tube
TN815-x00B-TR	TN815x00	DPAK	0.3 g	2500	Tape and reel
TN815-x00H	TN815x00	IPAK	0.4 g	75	Tube
TS820-x00B	TS820x00	DPAK	0.3 g	75	Tube
TS820-x00B-TR	TS820x00	DPAK	0.3 g	2500	Tape and reel
TS820-x00H	TS820x00	IPAK	0.4 g	75	Tube
TS820-x00T	TS820x00T	TO-220AB	2.3 g	50	Tube
TYNx08RG	TYNx08	TO-220AB	2.3 g	50	Tube

1. x (6, 7, 8, or 10) depends on voltage

5 Revision history

Table 11. Document revision history

Date	Revision	Changes
Apr-2002	4A	Last update.
13-Feb-2006	5	TO-220AB delivery mode changed from bulk to tube. ECOPACK statement added.
22-Jan-2010	6	Alpha definition updated in *Figure 1*. Thermal resistance, junction to case, updated in *Table 5*.

Please Read Carefully:

Information in this document is provided solely in connection with ST products. STMicroelectronics NV and its subsidiaries (“ST”) reserve the right to make changes, corrections, modifications or improvements, to this document, and the products and services described herein at any time, without notice.

All ST products are sold pursuant to ST’s terms and conditions of sale.

Purchasers are solely responsible for the choice, selection and use of the ST products and services described herein, and ST assumes no liability whatsoever relating to the choice, selection or use of the ST products and services described herein.

No license, express or implied, by estoppel or otherwise, to any intellectual property rights is granted under this document. If any part of this document refers to any third party products or services it shall not be deemed a license grant by ST for the use of such third party products or services, or any intellectual property contained therein or considered as a warranty covering the use in any manner whatsoever of such third party products or services or any intellectual property contained therein.

UNLESS OTHERWISE SET FORTH IN ST’S TERMS AND CONDITIONS OF SALE ST DISCLAIMS ANY EXPRESS OR IMPLIED WARRANTY WITH RESPECT TO THE USE AND/OR SALE OF ST PRODUCTS INCLUDING WITHOUT LIMITATION IMPLIED WARRANTIES OF MERCHANTABILITY, FITNESS FOR A PARTICULAR PURPOSE (AND THEIR EQUIVALENTS UNDER THE LAWS OF ANY JURISDICTION), OR INFRINGEMENT OF ANY PATENT, COPYRIGHT OR OTHER INTELLECTUAL PROPERTY RIGHT.

UNLESS EXPRESSLY APPROVED IN WRITING BY AN AUTHORIZED ST REPRESENTATIVE, ST PRODUCTS ARE NOT RECOMMENDED, AUTHORIZED OR WARRANTED FOR USE IN MILITARY, AIR CRAFT, SPACE, LIFE SAVING, OR LIFE SUSTAINING APPLICATIONS, NOR IN PRODUCTS OR SYSTEMS WHERE FAILURE OR MALFUNCTION MAY RESULT IN PERSONAL INJURY, DEATH, OR SEVERE PROPERTY OR ENVIRONMENTAL DAMAGE. ST PRODUCTS WHICH ARE NOT SPECIFIED AS "AUTOMOTIVE GRADE" MAY ONLY BE USED IN AUTOMOTIVE APPLICATIONS AT USER’S OWN RISK.

Resale of ST products with provisions different from the statements and/or technical features set forth in this document shall immediately void any warranty granted by ST for the ST product or service described herein and shall not create or extend in any manner whatsoever, any liability of ST.

ST and the ST logo are trademarks or registered trademarks of ST in various countries.

Information in this document supersedes and replaces all information previously supplied.

The ST logo is a registered trademark of STMicroelectronics. All other names are the property of their respective owners.

© 2010 STMicroelectronics - All rights reserved

STMicroelectronics group of companies

Australia - Belgium - Brazil - Canada - China - Czech Republic - Finland - France - Germany - Hong Kong - India - Israel - Italy - Japan - Malaysia - Malta - Morocco - Philippines - Singapore - Spain - Sweden - Switzerland - United Kingdom - United States of America

www.st.com